COMBINE HEADERS

MacDon

HARVESTING PERFORMANCE

For over 70 years MacDon has been a world leader in technology, innovation, and manufacturing of high-performance harvesting equipment. Our harvesting history is rooted deep in the rich prairie heritage of Winnipeg, Manitoba, Canada. MacDon products are distributed and supported worldwide from offices in Canada, the United States, Australia, Russia, Brazil, and Germany.

MacDon's relentless pursuit of improvement is driven by the desire to make harvesting easier and more productive for farmers. Working directly with producers and custom harvesters in the toughest real-world conditions guides MacDon to pioneer industry-leading innovations like the FlexDraper®. MacDon has a worldwide reputation for excellence as ***The Harvesting Specialists*** and we are proud to make equipment that helps producers harvest the crops that feed the world.

MacDon Head Office & Manufacturing

MacDon Offices

MacDon Products are Sold

SCAN HERE

MACDON WEBSITE

Join us on Facebook, Twitter, YouTube, Instagram, and LinkedIn.

MacDon The Harvesting Specialists.

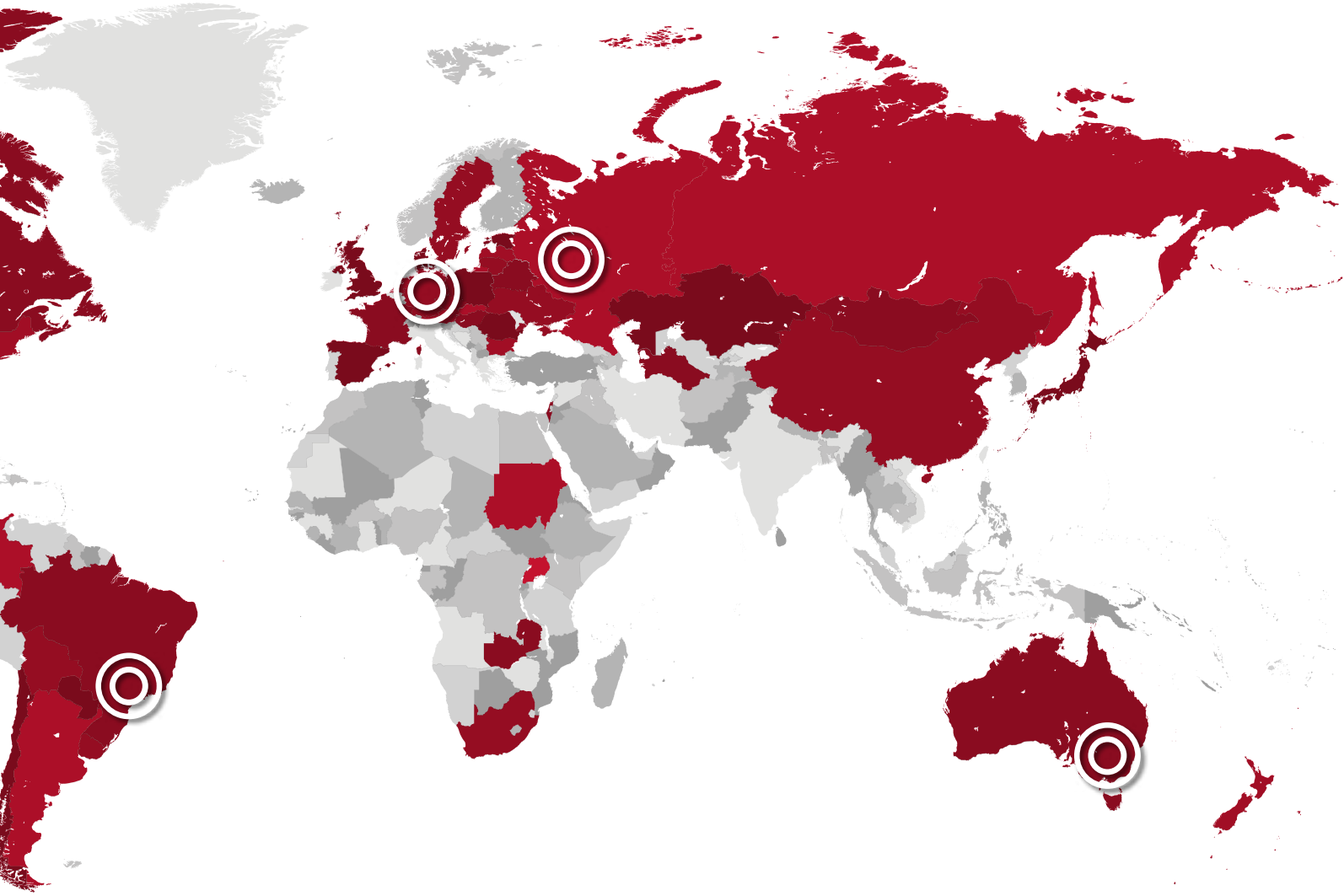

MacDon Industries Ltd.
680 Moray Street
Winnipeg, Manitoba, Canada R3J 3S3
t. (204) 885-5590 f. (204) 832-7749

MacDon, Inc.
10708 North Pomona Avenue
Kansas City, Missouri, United States 64153-1924
t. (816) 891-7313 f. (816) 891-7323

MacDon Australia Pty. Ltd.
A.C.N. 079 393 721
P.O. Box 103 Somerton, Victoria, Australia 3062
54 National Boulevard, Campbellfield, Victoria, Australia 3061
t. +61 3 8301 1911 f. +61 3 8301 1912

MacDon Brasil Agribusiness Ltda.
Rod BR-277, km 108, Lote 2
Parque Empresarial Sino, Campo Largo, Paraná
CEP 83608-000 Brasil
t. +55 41 2101 1713 f. +55 41 2101 1699

LLC MacDon Russia Ltd.
115054 Moscow, Russia
11 Shchipok St. Building 1
Floor 1, Office 7-I
t. +7 495 775 6971 f. +7 495 967 7600

MacDon Europe GmbH
Clayallee 353A
14169 Berlin
Germany
t. +49 3024 534446

GET MORE

D2/FD2

Durability. Capacity. Speed. MacDon's 2 Series Combine Headers deliver all the latest performance and innovation that MacDon offers. The D2 Draper and FD2 FlexDraper® boast an all-new frame that features a super structured five-sided backtube. This solid backbone is ready to handle up to 20% increased capacity* from an ultra-deep 50-inch draper deck†. And that deeper draper gets filled up a lot quicker thanks to MacDon's ClearCut™ High-Speed Cutting System. Wrap it all up with MacDon's rock-solid reliability, and it's clear to see how MacDon 2 Series Combine Headers get you more from every acre.

** Compared to the previous model.*

+ 127 cm (50")

** Some products or options may not be available in all markets.
Find your local dealer at ***MacDon.com***

SCAN HERE
D2 WEBSITE
FD2 WEBSITE
D230
MacDon

Active Float System

The D2 and FD2 get instant float response with MacDon's Active Float System. Integrated but independent of the combine's auto header height control, this simple mechanical system supports up to 97% of the header's weight, allowing the 2 Series Combine Headers to float over ground fluctuations effortlessly. In addition, this instant float response lets the header cut close to the ground without pushing dirt, delivering a clean, close, even cut every time.

Supports up to 97% of header's weight

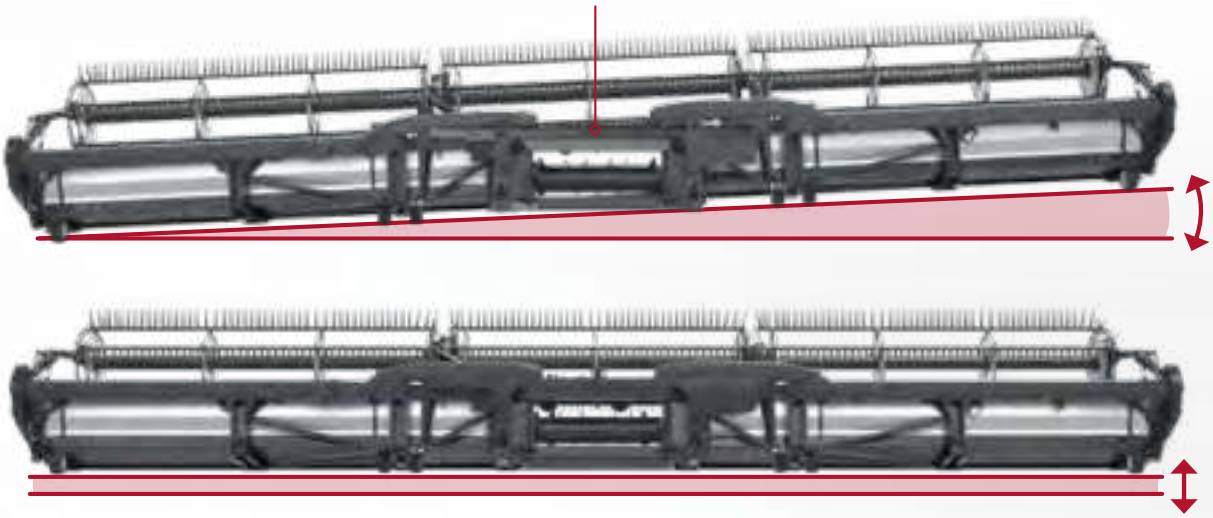

A ClearCut™ Knife Sections

MacDon ClearCut™ knife sections feature over 25% more cutting surface thanks to a longer blade and improved geometry. So what does that mean for you? It means faster, cleaner cut quality at higher ground speeds.

Stay Sharp!

Another great advantage of this new cutting system is the redesigned hardware. Fitted bolts make in-field knife section replacement quick and easy.

A

OVER 25% MORE CUTTING SURFACE

B ClearCut™ Pointed Knife Guards

ClearCut™ Pointed Knife Guards are multi-purpose knife guards designed to glide along the surface at high cutting speeds for a clean, even cut every time.

ClearCut™ PlugFree™ Knife Guards

This guard design gets the knife as close to the ground as possible while still protecting the blade from damaging debris in the field. ClearCut™ PlugFree Knife Guards resist plugging even in the nastiest conditions providing the closest, cleanest possible shave of the ground.

C ClearCut™ High-Speed Knife Drive

MacDon's improved knife drive satisfies your need for speed, providing more torque to power through the most challenging cutting conditions. Featuring a larger output shaft, a flywheel for smooth operation, and a direct hydraulic drive, it's the heart of MacDon's ClearCut™ High-Speed Cutting System.

D

D ClearCut™ High-Speed Cutting System

MacDon's ClearCut™ High-Speed Cutting System delivers clean cutting at up to 30% faster speeds*. This high-speed system is delivered with two unique knife guards, more power from MacDon's improved knife drive and over 25% more cutting surface from an increased knife and guard geometry. Altogether, these improvements allow 2 Series Combine Headers to provide a smooth, clean, even cut every time.

** Compared to the previous model.*

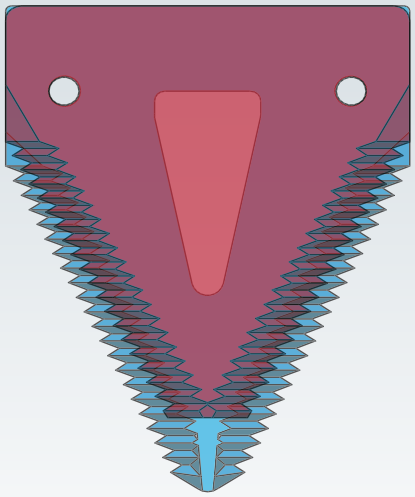

FD1 FD2

B

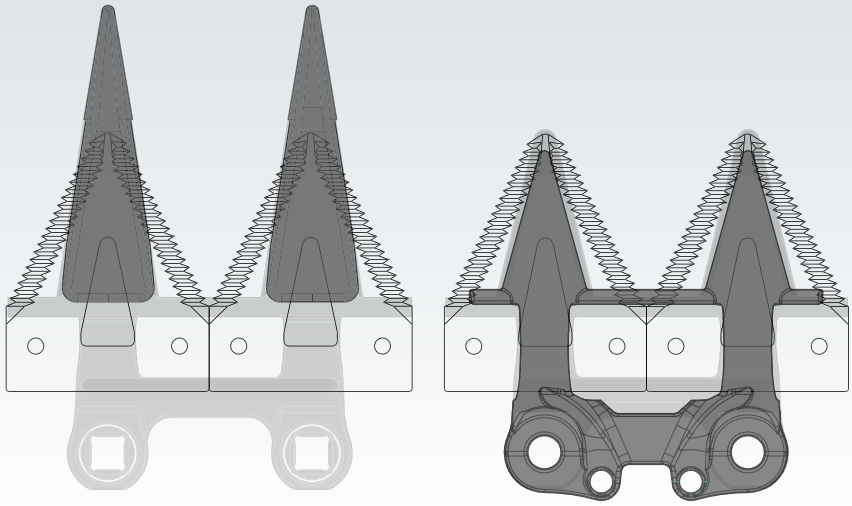

ClearCut™ Pointed Knife Guards

ClearCut™ PlugFree™ Knife Guards

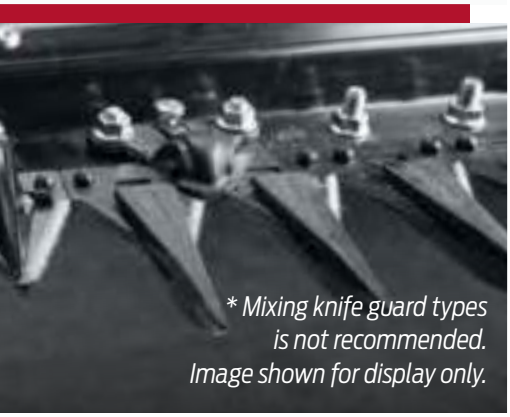

** Mixing knife guard types is not recommended. Image shown for display only.*

C

Any Combine

The 2 Series fits all major brand combines* with a completion package that integrates seamlessly with your combine for the best possible user experience. This multi-brand compatibility and interchangeability mean your investment will hold its value when you decide to upgrade.

** See your MacDon Dealer and find out if the 2 Series will fit your combine.*

Super-Sized Capacity

With today's modern combines, it's all about more capacity, and with the 2 Series, you get up to 20%* more of it. This serious capacity boost comes from an ultra-deep deck featuring 50-inch deep drapers. These huge drapers perform with ease, cleanly laying down the biggest bushiest high-volume crops, keeping those big combines running smoothly with consistent heads-first feeding. This deeper draper also provides improved cutterbar visibility from the combine.

New for the FD2 is a 50-foot header size; paired with the deeper draper deck, the FD250 delivers the most crop capacity ever offered in a FlexDraper® model+.

** Compared to the previous model.*

+ 127 cm (50"), 15.2 m (50')

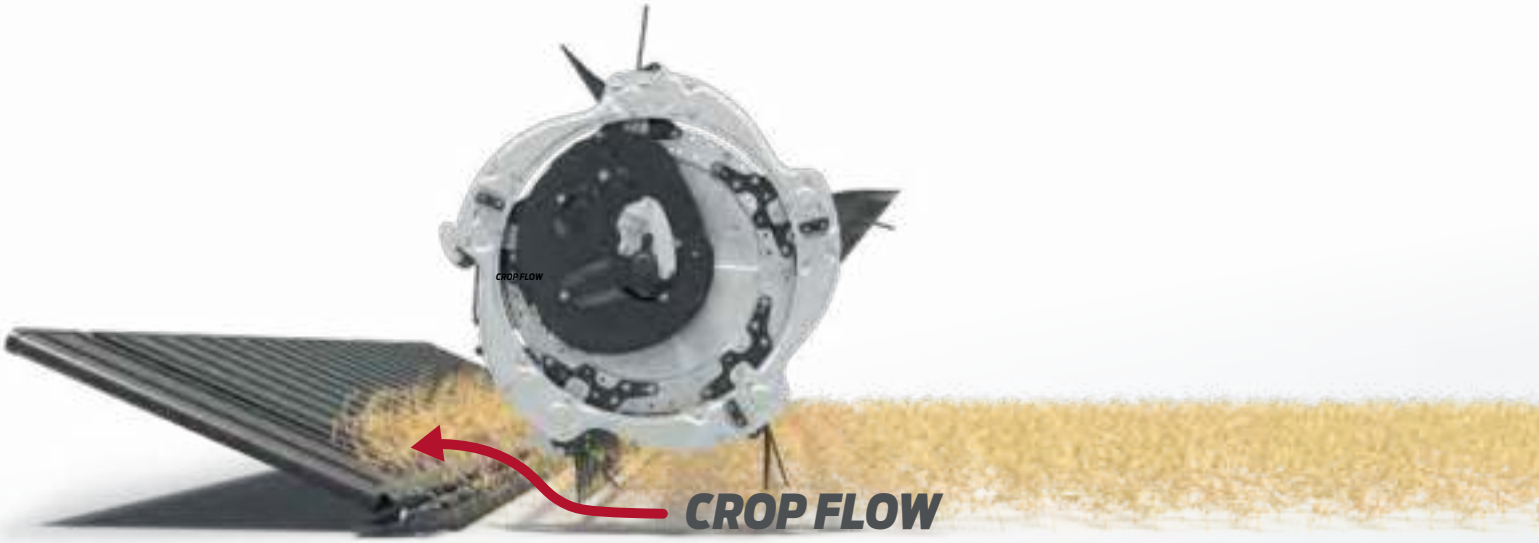

Amazing Reel Performance

The unique movement of the 2 Series reel picks up and gently places crop onto the drapers. Our cam design allows the reel fingers to get underneath lodged crop and pick it up before cutting. Aluminum reel ends and sectors help reduce overall weight and improve efficiency. The 2 Series header and reel are highly adjustable right from the cab for optimal performance. Header tilt control adjusting the draper and knife angle, and fore-aft reel positioning lets you set up for the most challenging real-world harvesting conditions.

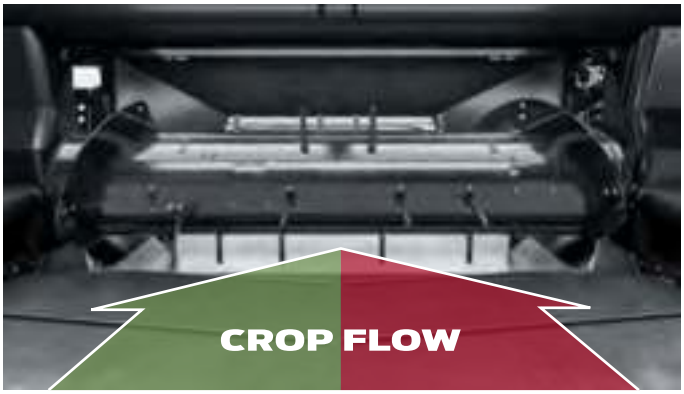

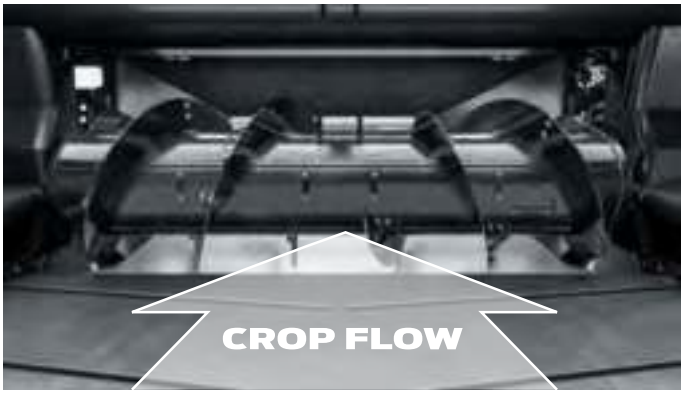

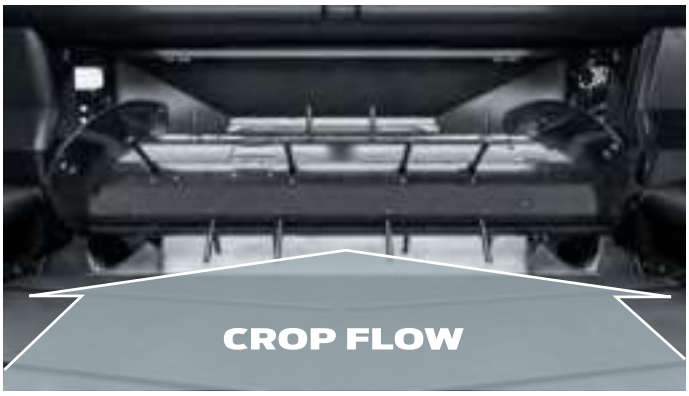

FeedMax™ Crop Feeding System

Big, small, new, old, the FeedMax™ Crop Feeding System has an aggressive feeding action and can be custom configured to match any combine's performance. Featuring combine-tailored speed control and customizable auger flighting to fit any combine's feeder house opening, the FeedMax Crop Feeding System upgrades and optimizes any combine's performance.

FeedMaX™

HEADS-FIRST FEEDING LETS YOU START EARLIER AND END LATER

Heads-First Active Crop Flow

Once the crop gets on the drapers, MacDon's Active Crop Flow takes over, swiftly moving the crop heads-first down the side drapers and into the combine's feeder house. Now standard on the 2 Series, the in-cab side draper speed control allows on-the-go adjustment. Heads-first feeding promotes peak combine efficiency by improving threshing action, creating better straw distribution, and providing an overall more productive fuel-saving harvest. What's more, MacDon's Active Crop Flow is more efficient in damp and moist conditions, meaning you can start earlier and work later into the evening.

Full-Length Upper Cross Auger

A performance option worth considering for anyone harvesting big bushy, high-volume crops, like canola, oilseed rape, peas, and mustard, is the Upper Cross Auger. The auger keeps bushy crops on the draper as they move to the center of the header, where twin pitch flighting actively and aggressively drives the crop down onto the feed auger. This option runs the entire length of the header and is available in all sizes.

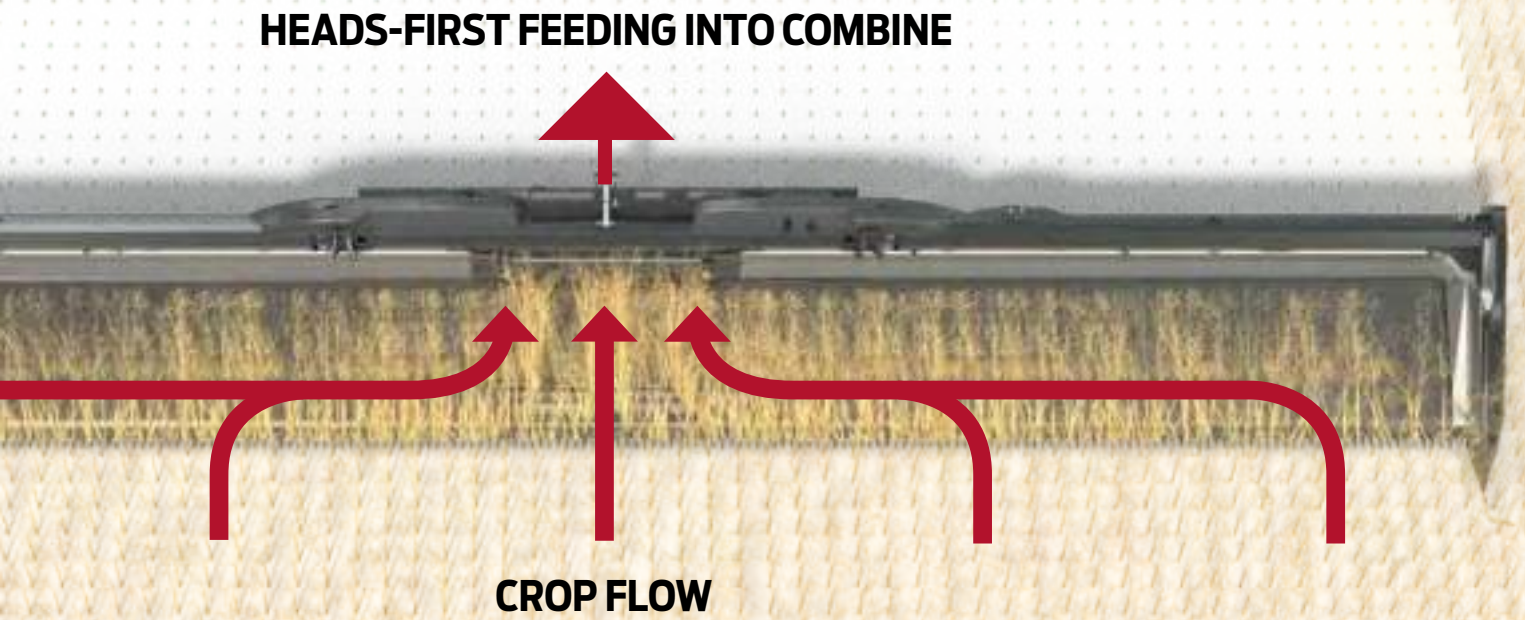

A

B

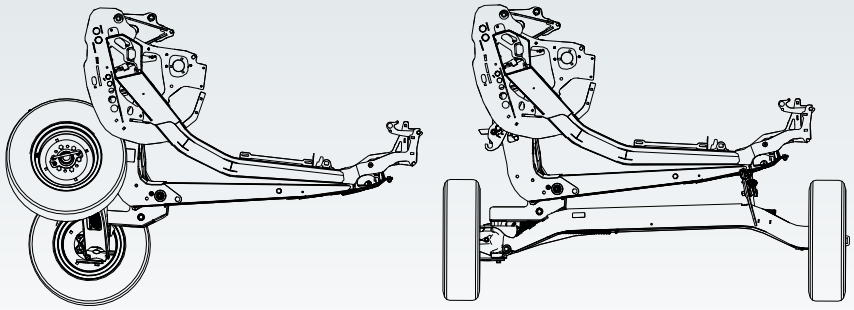
IN-FIELD
ON ROAD

A Aluminum Components

From a glance, the most noticeable design cue on the 2 Series is the addition of aluminum components. Aluminum features include reel endshields, reel sectors, and backsheets. But these components aren't just for looking good; they help reduce the overall weight of the header, improving efficiency without compromising strength.

B Easy Adjustments

You'll be ready to go as soon as the crop is with the 2 Series' easy adjustments.

Easy adjustments include:

- Easy to follow decals and adjustments to set the float (D2 & FD2) and flex (FD2 only).
- Easy access to the reel drive chain tensioner; just flip off the cover and use the Set-It-Right Multi-Tool to adjust.
- Now standard, in-cab on-the-go side draper speed control.
- Easily switch from flex to a rigid frame header with the flip of a lever (FD2 FlexDraper).
- Quick Latch End Divider System allows you to hook and connect your divider in one move.

C EasyMove™ Transport*

MacDon's EasyMove™ Transport System makes it faster than ever to move your 2 Series Combine Header from field to field. This Performance Option is entirely self-contained on the header and allows transport at speeds up to 32 km/h (20 mph)**. Machines equipped with this option can also use the transport wheels in-field to stabilize the header.

** Some products and/or options may not be available in all markets. See your MacDon Dealer for availability.*

*** Always follow local traffic laws and regulations.*

D Clean Sweep Crop Keeper System

MacDon added a bunch of little extras onto each 2 Series Combine Header to keep the crop moving in the right direction, into the combine and onto your bottom line.

The Clean Sweep Crop Keeper System includes:

- Angled reel fingers and tines on the reel ends.
- Reel endshield crop paddles.
- Reel endshield crop deflectors.
- Inner endshield crop deflector fingers.

ShatterGuard Reel Positioning

Using MacDon's Set-It-Right Multi-Tool, this quick, simple adjustment to the reel comes standard on all 2 Series models. ShatterGuard Reel Positioning is designed for tall brittle bushy crops like canola and oilseed rape. This adjustment sets the reel further back on the header, preventing shatter on the ground and keeping the crop on the drapers where you want it.

Set-It-Right Multi-Tool

Conveniently stored onboard the header, the Set-It-Right Multi-Tool is all you need to get the 2 Series dialed in for harvesting success.

The Set-It-Right Multi-Tool lets you make the following adjustments:

- Set and adjust the header float (D2 & FD2) and flex (FD2 only).
- Adjust the reel finger positioning and reel drive chain tension.
- Set the ShatterGuard reel positioning.
- Add and remove end divider cones.

A Consistently Close Shave

MacDon's low-profile cutterbar improves on an already good thing; the knife's distance to the draper is shorter, meaning less chance of seed loss at the cutterbar. In addition, in-cab header tilt control adjusts the knife angle to match any harvest condition, and the ultra-smooth ground-facing surface of the cutterbar helps it glide along the ground for a smooth close shave every time.

Durability

MacDon has always ensured reliability by engineering rock-solid products, and the 2 Series carries that tradition forward. The 2 Series boasts a new frame featuring a super structured five-sided back tube. This solid backbone is ready to handle the up to 20% increased capacity* of the ultra-deep 50-inch+ draper deck.

** Compared to previous model.*

+ 127 cm (50")

BIGGER. FASTER. FLEXIER.

FD2

With the FD2, you get up to 70% more flex from the one and only FlexDraper®*. The FD2 is a floating three-section flexible header with single, double, and triple reel configurations allowing the entire header frame, cutterbar, and reel to flex up to 17 inches+ on either end. More Capacity. More Speed. More Flex. The all-new FD2 gives you more of everything you need for harvesting performance from the company that brought you the Original FlexDraper®.

** Compared to the previous model.*
+ 43.2 cm (17")

SCAN HERE

FD2 WEBSITE

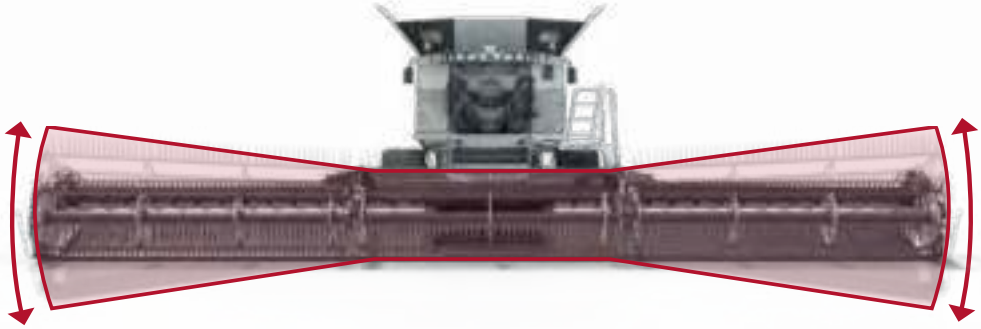

70% MORE FLEX

More Flex

With the FD2, you get up to 70% more flex from the one and only FlexDraper®*. The FD2 is a floating three-section flexible header with single, double, and triple reel configurations. This allows the entire header frame, cutterbar, and reel to follow ground contours as a unit, flexing up to 17 inches+ on either end while maintaining a close reel-to-cutterbar relationship. This unique flexing action allows the FD2 to follow the ground and deliver smooth, consistent, heads-first feeding to the combine, even at extreme flex.

** Compared to previous model. + 43.2 cm (17")*

FD2 FLEX RANGE

	Standard (Factory) Range	Increased Range**
FD225	102 mm [4"] up & 64 mm [2.5"] down	102 mm [4"] up & 102 mm [4"] down
FD230	165 mm [6.5"] up & 130 mm [5"] down	165 mm [6.5"] up & 165 mm [6.5"] down
FD235	205 mm [8"] up & 130 mm [5"] down	205 mm [8"] up & 205 mm [8"] down
FD240 Double Reel	205 mm [8"] up & 130 mm [5"] down	205 mm [8"] up & 205 mm [8"] down
FD241	205 mm [8"] up & 130 mm [5"] down	205 mm [8"] up & 205 mm [8"] down
FD240 Triple Reel	205 mm [8"] up & 205 mm [8"] down	
FD245	216 mm [8.5"] up & 216 mm [8.5"] down	
FD250	216 mm [8.5"] up & 216 mm [8.5"] down	

*** The flex range can be increased by removing the flex limiter, however a greater reel to cutterbar clearance is required. This is a customer configuration; instructions in Op Manual*

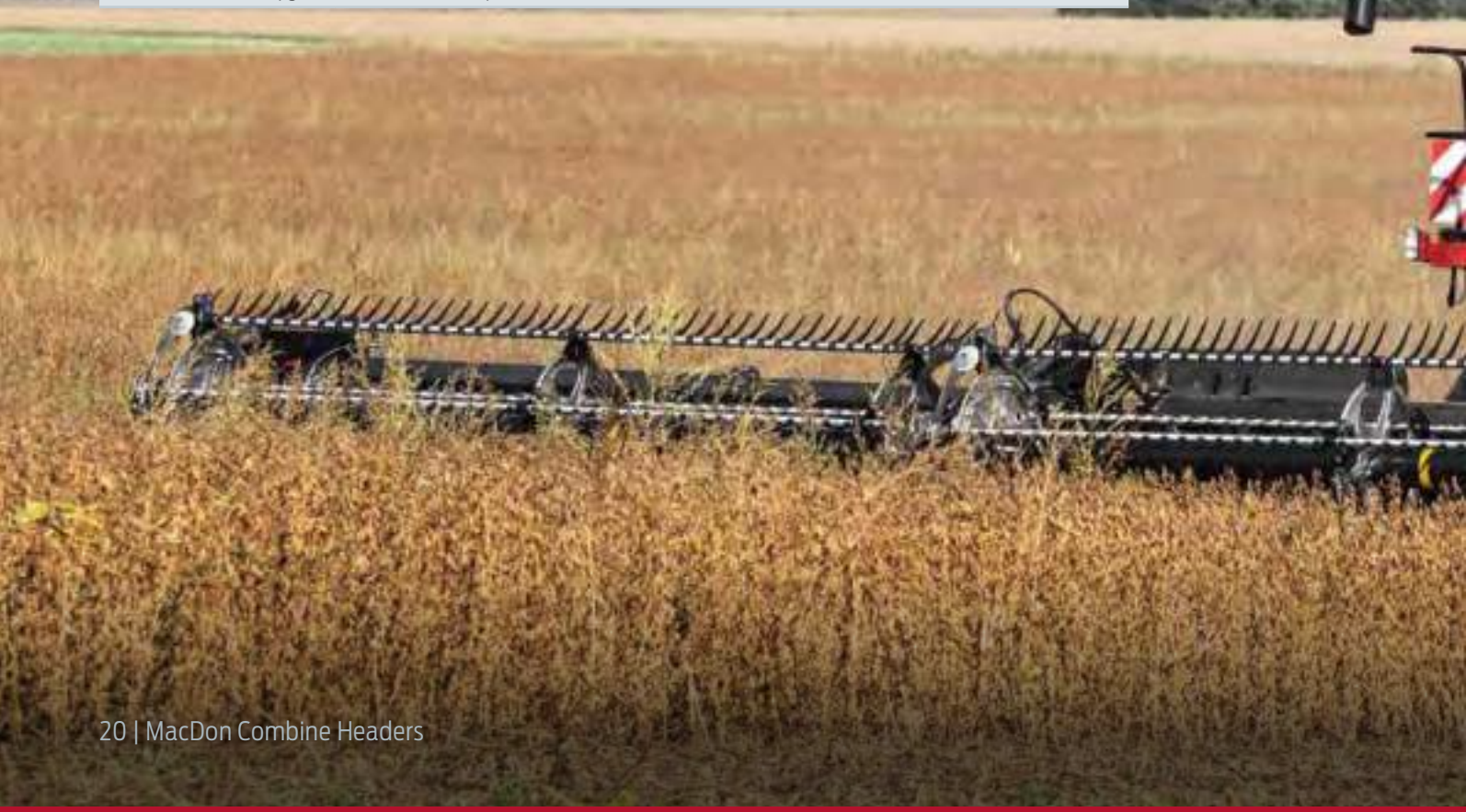

15.2 m (50')

Triple Reel

New for the FD2 is a triple reel option. Three reel sections now mirror the flexing points of the header, delivering an even closer reel-to-cutterbar relationship for smooth, consistent, heads-first feeding. Triple reels are optional on 40 foot and standard on 45 and 50 foot FD2 models+.

+ 12.2 m (40'), 13.7 m (45'), 15.2 m (50')

A Multi-Crop Harvesting Solution

The MacDon FD2 FlexDraper® is a multi-crop harvesting machine. Switch the FD2 easily from flex to a rigid frame header with the simple flip of a lever, giving you the versatility to move from one crop type to another. Cereals, oilseeds, beans, just about any crop in any condition; another reason why the FD2 is the ultimate performance upgrade for your combine.

B Close Reel-to-Cutterbar Relationship

The FD2 FlexDraper® features a fixed reel-to-cutterbar relationship. A small gap between the reel fingers and the cutterbar is maintained at all times, even at extreme flex, ensuring smooth, consistent, heads-first feeding of the crop over the entire length of the FlexDraper®.

NEW
41' & 50'

C The Right Size for Your Operation

New for the FD2 is a 50-foot header size, making the FD250 the highest capacity FlexDraper® yet, but the new offerings don't stop there; controlled traffic farms are covered with the 41-foot double reel FD2*.

Sizes Available:

7.6 m (25'), 9.1 m (30'), 10.6 m (35'), 12.2 m (40'), 12.5 m (41'), 13.7 m (45'), 15.2 m (50')

** Some products and/or options may not be available in all markets. See your MacDon Dealer for availability.*

D ContourMax™ Contour Wheels

ContourMax Contour Wheels allow the header to follow the field's contours, leaving a consistent stubble height while cutting up to 18 inches off the ground. This incredible performance option uses the FD2's Flex-Float Technology® along with the combine's auto header height control to its full advantage, conveniently adjusting in-cab and on-the-go for 1 to 18 inches of off-the-ground, ground following harvesting performance+.

+ 2.5 cm (1"), 45.7 cm (18")

A

B

C

D

1 TO 18 INCHES OFF-THE-GROUND

SET IT AND FORGET IT.

PW8

Pick-Up Headers

Our engineers worked hard to make the PW8 as user friendly as possible. From easy installation to time saving innovations, it all adds up to harvesting performance you can count on. MacDon PW8 Pick-Up Headers are the smartest choice on the market.

SCAN HERE

PW8 WEBSITE

A Serious Pick-Up Capacity in Any Crop Condition

A strengthened auger tube and robust chain drive allow the PW8 to easily handle high capacity loads. Both draper decks are run independently by hydraulic motors. The drapers are kept on track by MacDon's patented V-guide roller groove tracking system. Together, these systems allow the PW8 to process the heaviest swaths with ease.

On-the-Go Control

The PW8 works with the combine's Automatic Header Height and Lateral Tilt System.

B Simple Adjustments

A simple draper tensioning system, easy to see draper tension indicators, and common all metric hardware allow adjustments to be made in a flash.

Drop-and-Go Float Performance

Our simple and effective spring-over-shock floatation system provides a ground following 45.7 cm (18") of wheel float, and requires no adjustment during operation or lockout during transport. Float indicator numbers are clearly visible on both sides of the machine, letting you know the PW8 is operating at an optimal float position.

C Great Seed Retention

Tight draper connectors and seals, along with a deep overlap of front and rear draper decks ensure that more seed is making its way into the combine for better yields.

Easy Maintenance

Five 100 hour grease points make for quick and easy maintenance of this machine.

Brand Compatibility

Switch combine brands with MacDon PW8 completion packages. These packages make it easy to switch between combine brands which increases resale value down the road.

** Some products and/or options may not be available in all markets. See your MacDon Dealer for availability.*

B

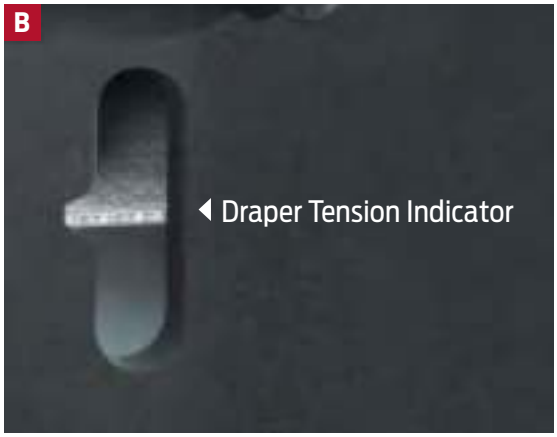

Draper Tension Indicator

C

SPECIFICATIONS

D2 DRAPER HEADER SPECIFICATIONS

Size*	7.6 m (25')	9.1 m (30')	10.6 m (35')	12.5 m (41')	13.7 m (45')
Weight** Single Knife Drive without FM200	2120 kg (4672 lb)	2484 kg (5475 lb)	2706 kg (5963 lb)	-	-
Weight** Double Knife Drive without FM200	-	-	-	3006 kg (6626 lb)	3127 kg (6893 lb)
Knife: Type / Drive / Speed	Single or Double knife / Hydraulic, MacDon design enclosed oil bath knife drive box(es) / 1200-1400/1500 spm, varies depending on header size				
Guard Types Available	ClearCut™ Pointed Guards - Forged and Double Heat Treated (DHT) with Forged, Single Bolt Adjustment Hold-Down; ClearCut™ PlugFree™ Short Guards - Forged and Double Heat Treated (DHT) with Forged, Dual Bolt Adjustment Hold-Down				
Reel: Type / Drive / Speed / Fingers	Pick-up Reel, six bats, one-piece (single) or two-piece (double), flip-over design, cam-leading finger control / Hydraulic / 0 to 67 rpm (varies depending on combine model) / 290 mm (11.4") length, wear-resistant HD plastic, 102 mm (4") spacing				
Conveyor: Type / Drive / Speed / Delivery	1270 mm [50"] / Hydraulic / FM200 (Combine Float Module) - 0 - 209 m/min [687 ft/min] / 15' (on SP Windrower) -1395 - 1525 mm [54.9" - 60.0"]				
Field-Installed Options	EasyMove™ Transport System, Upper Cross Auger, VertiBlade™ Vertical Knife, stabilizer wheels, lateral tilt automatic header height control, Sunflower attachment				

** Product size availability varies by market ** All listed weights are approximations and will vary depending on header configuration. Check with your dealer for combine ratings.*

FD2 FLEXDRAPER® SPECIFICATIONS

Size*	7.6 m (25')	9.1 m (30')	10.6 m (35')	12.2 m (40')	12.5 m (41')	13.7 m (45')	15.2 m (50')
Weight** Single Knife Drive without FM200	2276 kg (5016 lb)	2655 kg (5851 lb)	2863 kg (6311 lb)	2947 kg (6495 lb)	-	-	-
Weight** Double Knife Drive without FM200	-	-	2943 kg (6487 lb)	3063 kg (6759 lb)	3238 kg (7136 lb)	-	-
Weight ** Double Knife Drive with Triple Reel without FM200	-	-	-	3212 kg (7079 lb)	-	3590 kg (7912 lb)	3803 kg (8382 lb)
Knife: Type / Drive / Speed	Single or Double knife / Hydraulic, MacDon design enclosed oil bath knife drive box(es) / 1200-1400/1500 spm, varies depending on header size						
Guard Types Available	ClearCut™ Pointed Guards - Forged and Double Heat Treated (DHT) with Forged, Single Bolt Adjustment Hold-Down; ClearCut™ PlugFree™ Short Guards - Forged and Double Heat Treated (DHT) with Forged, Dual Bolt Adjustment Hold-Down						
Reel: Type / Drive / Speed / Fingers	Pick-up reel, five bats, one-piece (single),two-piece (double) or three-piece (triple), flip-over design, cam-leading finger control / Hydraulic / 0 to 67 rpm (varies depending on combine model) / 290 mm (11.4") length, wear-resistant HD plastic, 102 mm (4") spacing						
Conveyor: Type / Drive / Speed	1270 mm (50") deep, reversible, rubber skim-coated drapers, double V-guide with tracking, integral seal on leading edge / 0 to 209 m/min (0 to 687 ft/min)						
Standard Features	Fits most current model combines, hydraulic fore-aft reel positioner, hydraulic header tilt, in-cab side draper speed control, cutterbar poly wear plates, auto-header height with header angle and ground pressure indicators						
Field-Installed Options	EasyMove™ Transport System, ContourMax™ Contour Wheels, Upper Cross Auger, VertiBlade™ Vertical Knife, stabilizer wheels, lateral tilt automatic header height control, Sunflower attachment						

** Product size availability varies by market. ** All listed weights are approximations and will vary depending on options installed. Check with your dealer for combine ratings.*

FM200 FLOAT MODULE SPECIFICATIONS

	Center Draper	Feed Auger
Weight	Approximately 1083 – 1171 kg (2387 – 2581 lb), varies by combine configuration	
Size	2000 mm (78.7") width	1630 mm (64.1") width
Type	Hydraulic drive (reversible), self tracking rubber coated polyester fabric feed draper with rubber slats	Mechanical drive (reversible), removable retracting fingers with bolt on flighting
Speed	107-122 m/min (350-400 ft/min), varies with combine brand	191 - 195 rpm, varies with combine brand
Header Floatation: Type/ Vertical Range/Lateral Range (Tilt)	2 pairs of coil springs, independent adjustment, transport lock-out / 178 mm (7") / 4.8 degrees	

FD2 FLEX RANGE

	Standard (Factory) Range	Increased Range**
FD225	102 mm [4”] up & 64 mm [2.5”] down	102 mm [4”] up & 102 mm [4”] down
FD230	165 mm [6.5”] up & 130 mm [5”] down	165 mm [6.5”] up & 165 mm [6.5”] down
FD235	205 mm [8”] up & 130 mm [5”] down	205 mm [8”] up & 205 mm [8”] down
FD240 Double Reel	205 mm [8”] up & 130 mm [5”] down	205 mm [8”] up & 205 mm [8”] down
FD241	205 mm [8”] up & 130 mm [5”] down	205 mm [8”] up & 205 mm [8”] down
FD240 Triple Reel	205 mm [8”] up & 205 mm [8”] down	
FD245	216 mm [8.5”] up & 216 mm [8.5”] down	
FD250	216 mm [8.5”] up & 216 mm [8.5”] down	

*** The flex range can be increased by removing the flex limiter, however a greater reel to cutterbar clearance is required.*
This is a customer configuration; instructions in Op Manual

PW8 PICK-UP HEADER SPECIFICATIONS

Weight	1452 kg (3200 lbs)
Overall Width	5.66 m (18’ 6”)
Effective Picking Width	4.52 m (14’ 8”) between divider lugs
Overall Depth	246 cm (96.9”)
Auger Diameter	61 cm (24”)
Auger Fingers	Factory set for 18, qty to match specific combine feeder house
Auger Speed	0-200 rpm (Depending on combine model)
Auger Drive Chain	Endless # 80 chain
Drive Shaft	Heavy duty, 1.375" diameter, fully shielded with built-in clutch
Draper Belts	Each deck consists of (4) 1125 mm (44.3”) wide drapers joined and equipped with patented tracking V-guide on right end
Draper Speed	0 – 163 m/min (535 ft/min), depending on combine model
Draper Fingers	5" Plastic
Draper Rollers	Large 127 mm (5”) drive and 102 mm (4”) idler roller (same on both decks) with V-Groove on the right-hand side to ensure proper draper tracking and reduced slippage
Draper Drive	Two, 5.9 CID (97 cc) hydraulic motors
Gauge Wheels	18.5/8.50-8, adjustable height
Header Float	Spring-Over-Shock System requires no adjustment or lock-out for transport and provides 18 inches of wheel float

GET MORE!
with Performance Parts.

The FD2 FlexDraper® gives you more harvesting performance than ever before, and the best way to keep it performing like a champ is with MacDon Performance Parts! This all-new lineup of MacDon Performance Parts is specifically designed to work with and enhance your FD2's performance. To keep you going in the field, our FD2 Customer Convenience Kits are easy all in one parts kits designed to maximize your uptime.

Check out the newest FD2 Customer Convenience Kits from MacDon Performance Parts...

MORE Performance!
MORE Up-Time!
MORE Convenience!
GET MORE with MacDon Performance Parts!

Scan the QR Code to get your FD2 Performance Parts Guide!

Draper Header Service Kits

Available in both PlugFree™, and Pointed Guard Versions, Draper Header Service Kits from MacDon are a convenient "First Aid Kit" for your header. These kits contain a selection of high wear parts such as guards, sections, and hardware, and are ideal to have on hand at all times.

See FD2 Performance Parts Guide for full kit contents.

PART #	DESCRIPTION
311789	FD2 POINTED GUARD SERVICE KIT
311790	FD2 PLUGFREE™ GUARD SERVICE KIT

Service Kit Plus

An expanded kit of common wear parts and repair kits, ideal for customers operating multiple FD2 headers, or those who want to maximize uptime. Available for single and double knife drive headers configured with Pointed Guards.

See FD2 Performance Parts Guide for full kit contents.

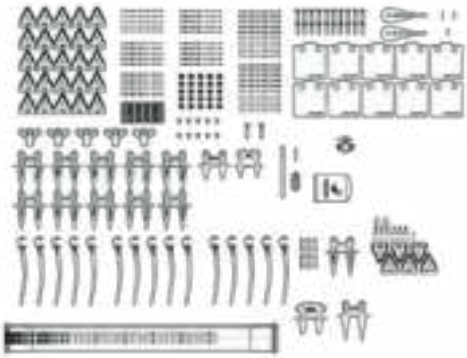

PART #	DESCRIPTION
340492	POINTED GUARD, SINGLE KNIFE DRIVE
340493	POINTED GUARD, DOUBLE KNIFE DRIVE

Knife Assembly Kits

Provides all necessary knife segments and splice kits required to replace the complete knife on a header. Come packaged in 1 box for ease of transportation from dealership to field.

See FD2 Performance Parts Guide for full kit contents.

Guard Kits

Convenient kits, containing all guards needed for a complete replacement. Come packaged on a small pallet for ease of transportation from dealership to field.

See FD2 Performance Parts Guide for full kit contents.

SCAN HERE

MACDON WEBSITE

MacDon®

The Harvesting Specialists. MacDon.com

Trademarks of products are the marks of their respective manufacturers and/or distributors. Specifications and options subject to change without notice.
Products subject to availability. Products featured may include available options. **MD-1005C1 2023MY Combine Headers Brochure - ENG V - 12-02-22 Part#262002**